TUBE FIRED FRYERS
40 LB. FLOOR MODEL

IMPERIAL®

Model Number
IFS-40

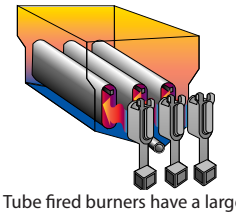

Tube fired burners have a large heat transfer area.

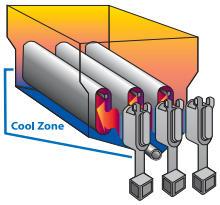

Large cool zone captures and hold particles out of the fry zone.

Robotic welding is precise, virtually eliminating leaks.

IFS-40 shown

TUBE FIRED BURNERS - High efficiency cast iron burners have a large heat transfer area.
- Tubes are constructed of heavy gauge metal with a built-in deflector system.
- 105,000 BTU (31 KW) total output.
- Millivolt temperature control circuit.
- Snap acting thermostat has a 200° F - 400° F (93° C-204° C) temperature range.
- Fast recovery to desired temperature.
- Heats oil quickly producing a better tasting product with less oil absorption.
- 100% safety shut-off.

LARGE COOL ZONE - Captures and holds particles below the tubes, out of the fry zone.
- Reduces taste transfer.

STAINLESS STEEL FRYPOTS - Frying area is 14" x 14" (356 x 356 mm).
- Frypot tubes and sides are robotically welded stainless steel to virtually eliminate leaks.
- Fine mesh wire crumb is included.
- Recessed bottom facilitates draining, slants toward the drain.
- 1-1/4" (32 mm) full port drain valve empties frypot quickly and safely.
- Two large, nickel-plated fry baskets with vinyl coated, heat protection, handles are included.
- Basket hangers are stainless steel.

EXTERIOR FEATURES - Stainless steel front, door, sides, basket hanger and frypot.
- Welded and polished stainless steel seams.
- Full heat shield protects control panel.
- Full bottom chassis provide structural support.
- Plate mounted 6" (152 mm) heavy duty stainless steel legs or optional casters assures secure support.
- One year parts and labor warranty. Limited warranty on frypot, stainless steel frypot is five years pro-rated.

TUBE FIRED FRYERS
40 LB. FLOOR MODEL

IMPERIAL®

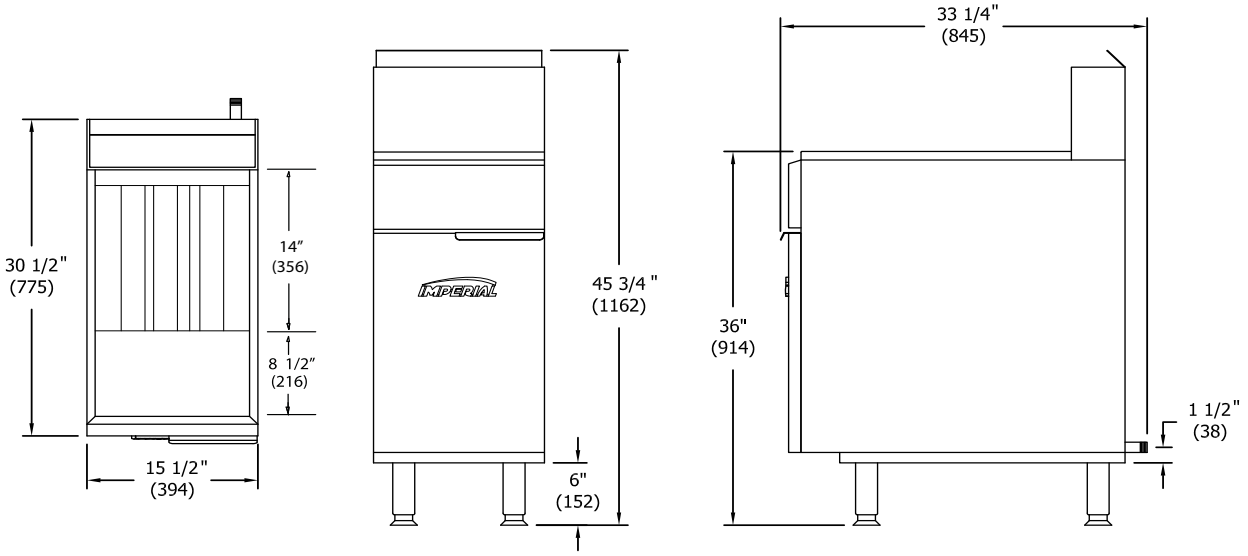

40 LB. TUBE FIRED FRYERS

MODEL	OIL CAPACITY	GAS OUTPUT BTU	GAS OUTPUT (KW)	NUMBER OF BURNERS	SHIP WEIGHT (KG)	SHIP WEIGHT LBS
IFS-40	40 lbs (22 L)	105,000	(31)	3	(100)	221
IFS-DS	N/A, drain station	N/A	N/A	N/A	(60)	130

Measurements in ( ) are metric equivalents.

MANIFOLD PRESSURE NATURAL GAS	MANIFOLD PRESSURE PROPANE GAS	MANIFOLD SIZE
4.0" W.C.	11.0" W.C.	3/4"

Specify elevation, if over 2,000 ft.

NOTES

- "DS" drain station with storage cabinet, no filter. Includes a 4" (102 mm) deep stainless steel drain pan

MODEL	FRYING AREA	DIMENSIONS	CRATED DIMENSIONS
IFS-40	14" x 14" (356 x 356 mm)	15-1/2" w x 30-1/2" d x 45-3/4" h (394 x 775 x 1162 mm)	18" w x 34" d x 35" h (457 x 864 x 889 mm)
IFS-DS	N/A	15-1/2" w x 30-1/2" d x 44-1/4" h (394 x 775 x 1124 mm)	18" w x 34" d x 35" h (457 x 864 x 889 mm)

CLEARANCE REQUIREMENTS

For use only on non-combustible floors. Legs or casters are required for non-combustible floors; or 2" (51 mm) overhang is required when curb mounted. Provide 0" clearance from non-combustible surfaces and 6" (152 mm) from combustible surfaces.

OPTIONS AND ACCESSORIES

- Fryer drain station with storage cabinet
- Manual timer
- Catering package for easy transporting
- Extra fry baskets with vinyl coated handles
- Gas shut off valve, 3/4" N.P.T.
- Quick disconnect and flexible gas hose, 3/4" N.P.T.
- 6" (152 mm) casters

IMPERIAL®
1128 Sherborn Street Corona, CA 92879
800.343.7790 Ph: 951.281.1830 Fx: 951.281.1879
www.imperialrange.com
E-mail: imperialsales@imperialrange.com

© 2013 Imperial Commercial Cooking Equipment Printed in the U.S.A.

Imperial reserves the right to change specifications at any time without prior notice and without any obligation for past or future equipment purchases. Visit www.imperialrange.com for specification updates.